MURR ELEKTRONIK
stay connected

MET Single phase control and isolation transformer P: 4000VA IN: 400VAC+/- 5% OUT: 230VAC

Single-phase - Control and Isolation transformers
Power: 4000 VA

Image



- (EN 61558)
- touch protected (EN 60529) IP20
- Isolation class T 40/B

Vicarious picture

Approvals

Technical Data

Isolation class	T 40/B
Temperature range	-20...+40 °C, no condensation
Mounting method	Long-hole mounting
Inrush current	186.7 A (400 V AC)
Input	
Input voltage	400 V AC ±5 %
Frequency	50/60 Hz
Short-circuit current	480.8 A (400 V AC)
Input current	10.32 A (400 V AC)
Output	
Output voltage	230 V AC
General data	
Standards	(EN 61558-2-4), (EN 62041) category 0
Test isolation voltage	4 kV (prim./sec.)
Dimensions H × W × D	206 x 198 x 250 mm
Fixing centers a × b × c	200 x 174 x 9 mm
Drill hole Ø	9 x 14 mm
Commercial data	
Net weight	29600
Weight unit	gram
Basic unit	pc.
Customs tariff number	85043200
Unit (piece)	1
Limited value	1

All data on this data sheet was compiled carefully.
Liability regarding correctness, completeness, and actuality is limited to gross negligence. Created: 11/12

stay connected

Circuit diagram

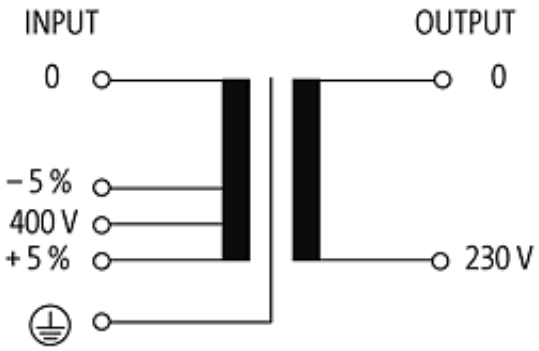

Dimension drawing

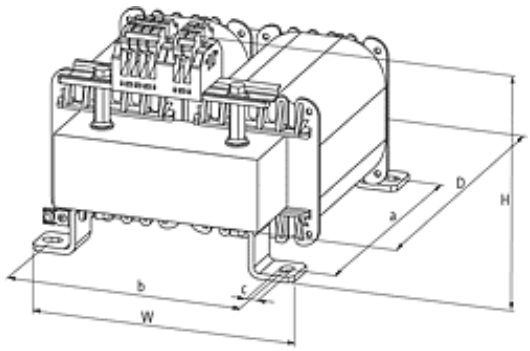

All data on this data sheet was compiled carefully.
Liability regarding correctness, completeness, and actuality is limited to gross negligence. Created: 11/12